4-ø8 HOLES

HICO

THREE PHASE STEP - UP TRANSFORMER

VOLTAGE RATING	
H.V	345,000 V
X.V	34,500 V
T.V	13,800 V

BIL OF WINDING	
H.V	1050 kV
H.V.N	200 kV
X.V	200 kV
X.V.N	200 kV
T.V	110 kV

kVA RATING AT 65°C RISE			
	ONAN	ONAF1	ONAF2
H.V	138,000	184,000	230,000
X.V	138,000	184,000	230,000

SOUND LEVEL	ONAF2 STAGE (230MVA)	71 dB

MATERIAL	
INSULATING OIL	ASTM D3487 TYPE II
CONDUCTOR	COPPER

RATED FREQUENCY	60Hz
COOLING METHOD	ONAN/ONAF1/ONAF2

TEMPERATURE RISE	
TOP OIL	65°C
AVG./HOT SPOT WINDING	65°C/80°C

% IMPEDANCE			
POSITIVE SEQUENCE			
H.V – X.V	RAT.	10.46 %	AT 138 MVA
ZERO SEQUENCE			
H.V – X.V	RAT.	9.55 %	AT 138 MVA

WEIGHT	
CORE AND COIL	237,658 LBS
TANK & FITTING	106,924 LBS
UNTANKING	249,780 LBS
INSULATION	16,652 LBS
RADIATOR (EACH)	1,810 LBS
CONSERVATOR	6,614 LBS
OIL IN RADIATORS (AT 20°C)	12,151 LBS 1,771 GAL
OIL IN CONSERVATOR (AT 20°C)	4,680 LBS 650 GAL
TOTAL INSULATING OIL (AT 20°C)	123,127 LBS 16,878 GAL
TOTAL	467,709 LBS
SHIPPING (WITHOUT OIL)	295,860 LBS

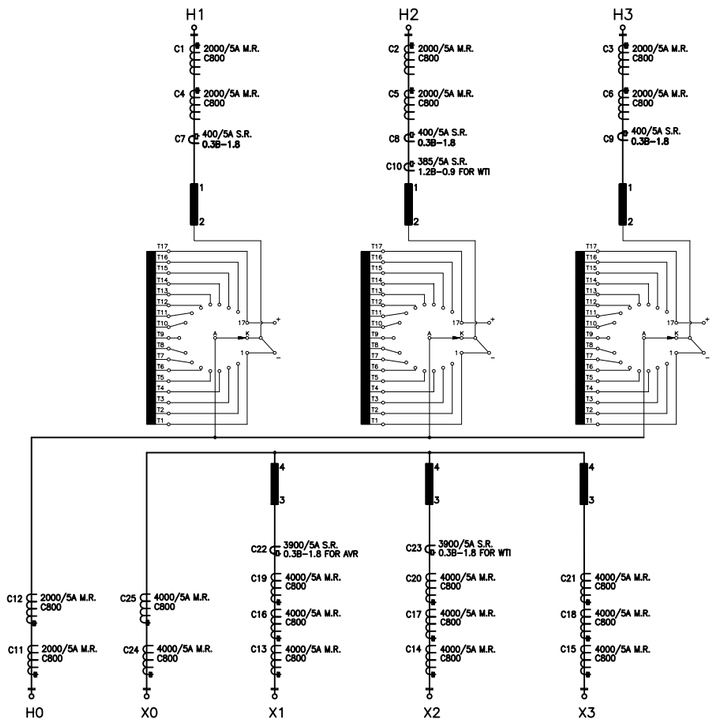

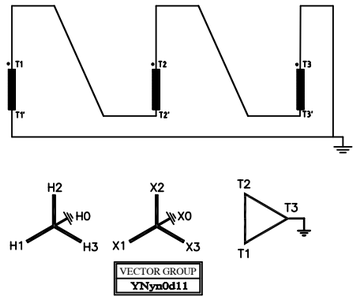

* CONNECTIONS FOR CURRENT TRANSFORMER

LOCATION	HV(C1–C9) & H0(C11–C12)
CT CURRENT RATIO	2000:5
TAP CONNECTION	C800
X3 – X4	300 : 5
X1 – X2	400 : 5
X4 – X5	500 : 5
X2 – X3	800 : 5
X2 – X4	1100 : 5
X1 – X3	1200 : 5
X1 – X4	1500 : 5
X2 – X5	1600 : 5
X1 – X5	2000 : 5

LOCATION	Additional CT on HV (C7~C9)
CT CURRENT RATIO	400:5
TAP CONNECTION	0.3Ø–1.8
X1 – X2	400 : 5

LOCATION	XV(C13–C21) & X0(C24–C25)
CT CURRENT RATIO	4000:5
TAP CONNECTION	C800
X1 – X2	500 : 5
X3 – X4	1000 : 5
X2 – X3	1500 : 5
X1 – X3	2000 : 5
X2 – X4	2500 : 5
X1 – X4	3000 : 5
X2 – X5	3500 : 5
X1 – X5	4000 : 5

LOCATION	HV FOR WTI (C10)
CT CURRENT RATIO	385:5
TAP CONNECTION	1.2Ø–0.9
X1 – X2	385 : 5

LOCATION	XV FOR AVR, WTI (C22, 23)
CT CURRENT RATIO	3900:5
TAP CONNECTION	0.3Ø–1.8
X1 – X2	3900 : 5

* CONTINUOUS THERMAL CURRENT RATING FACTOR OF ALL CTs IS 2.0.

WINDING	VOLTS(V)	CURRENT(A) 138MVA	184MVA	230MVA	ON-LOAD TAP CHANGER POSITION	0	S
HV	379,500	210	280	350	16		T1
	377,344	211	282	352	15		T2
	375,188	212	283	354	14		T3
	373,031	214	285	356	13		T4
	370,875	215	286	358	12		T5
	368,719	216	288	360	11		T6
	366,562	217	290	362	10		T7
	364,406	219	292	364	9		T8
	362,250	220	293	367	8	+	T9
	360,094	221	295	369	7		T10
	357,938	223	297	371	6		T11
	355,781	224	299	373	5		T12
	353,625	225	300	376	4		T13
	351,469	227	302	378	3		T14
	349,312	228	304	380	2		T15
	347,156	230	306	383	1		T16
	345,000	231	308	385	NR		T17
					N		K
					NL		T1
	342,844	232	310	387	1		T2
	340,688	234	312	390	2		T3
	338,531	235	314	392	3		T4
	336,375	237	316	395	4		T5
	334,219	238	318	397	5		T6
	332,062	240	320	400	6		T7
	329,906	242	322	403	7		T8
	327,750	243	324	405	8	–	T9
	325,594	245	326	408	9		T10
	323,438	246	328	411	10		T11
	321,281	248	331	413	11		T12
	319,125	250	333	416	12		T13
	316,969	251	335	419	13		T14
	314,812	253	337	422	14		T15
	312,656	255	340	425	15		T16
	310,500	257	342	428	16		T17
XV	34,500	2309	3079	3849		–	

1. MAXIMUM OPERATING PRESSURE OF LIQUID PRESERVATION SYSTEM(CONSERVATOR) : MAIN TANK AND CONSERVATOR DESIGNED FOR 14.7 PSI VACUUM FILLING.
2. THE INSULATING OIL CONTAINS NO DETECTABLE LEVEL OF PCB AT THE TIME OF MANUFACTURE.
3. DO NOT PLACE TEMPORARY LOADS OR STAND ON THE TRANSFORMER WHEN THE TANK IS UNDER VACUUM.
4. COOLING AIR TEMPERATURE / LIMIT SHALL BE APPLIED TO IEEE C57.12.00

NOTE.
1. ALL DIMENSIONS ARE IN INCHES.
2. MATERIAL : STAINLESS STEEL.
3. THICKNESS : 0.079 inch
4. LETTER COLOR : BLACK
5. % IMPEDANCE , SOUND LEVEL, WEIGHT, SERIAL No. & DATE OF MFG WILL BE ENGRAVED AFTER HICO FACTORY TEST.

< CALCULATED VALUE OF WEIGHT >

WEIGHT	
CORE AND COIL	237,658 LBS
TANK & FITTING	106,924 LBS
UNTANKING	249,780 LBS
INSULATION	16,652 LBS
RADIATOR (EACH)	1,810 LBS
CONSERVATOR	6,614 LBS
OIL IN RADIATORS (AT 20°C)	12,151 LBS 1,771 GAL
OIL IN CONSERVATOR (AT 20°C)	4,680 LBS 650 GAL
TOTAL INSULATING OIL (AT 20°C)	126,764 LBS 17,661 GAL
TOTAL	471,348 LBS
SHIPPING (WITHOUT OIL)	295,860 LBS

FINAL RELEASED DRAWING
DATE 1/17/2025
HYOSUNG HICO

APPLIED STANDARD	: IEEE Std. C57.12.00 & C57.12.90
INSTRUCTION BOOK NO.	: C41–4167–202305–0525–1000
SERIAL NO.	: 10186424_0001
DATE OF MFG.	: 2024

MADE IN USA

10 10 10 400 550

Recurrent Energy / Cascade (HTA03030000445)
3ø 60Hz 138/184/230MVA 345/34.5/13.8kV ONAN/ONAF/ONAF YN0yn0d1 OLTC ON HV

No.	DATE	DESCRIPTION of REVISION

DWG NAME: NAMEPLATE
DWG No.: ET1A1102215
UNIT: mm
SCALE: 1:1

DESIGNED	CHECKED	REVIEWED	APPROVED	DATE
S. KIM 08/20/24	M. MANZANO 08/20/24	YT SOHN 08/20/24	YB.BAE 08/20/24	04/04/24

REVISION No. 00
THIRD ANGLE PROJECTION

HYOSUNG HEAVY INDUSTRIES
TYPE: POWER TRANSFORMER
REF. No. –
A1(841X594mm) FORM CS-415-1(0)-001

이 도면에서 도시된 정보는 HYOSUNG HEAVY INDUSTRIES의 property, and may not be disclosed and/or reproduced without the prior official permission of HYOSUNG HEAVY INDUSTRIES Corp.