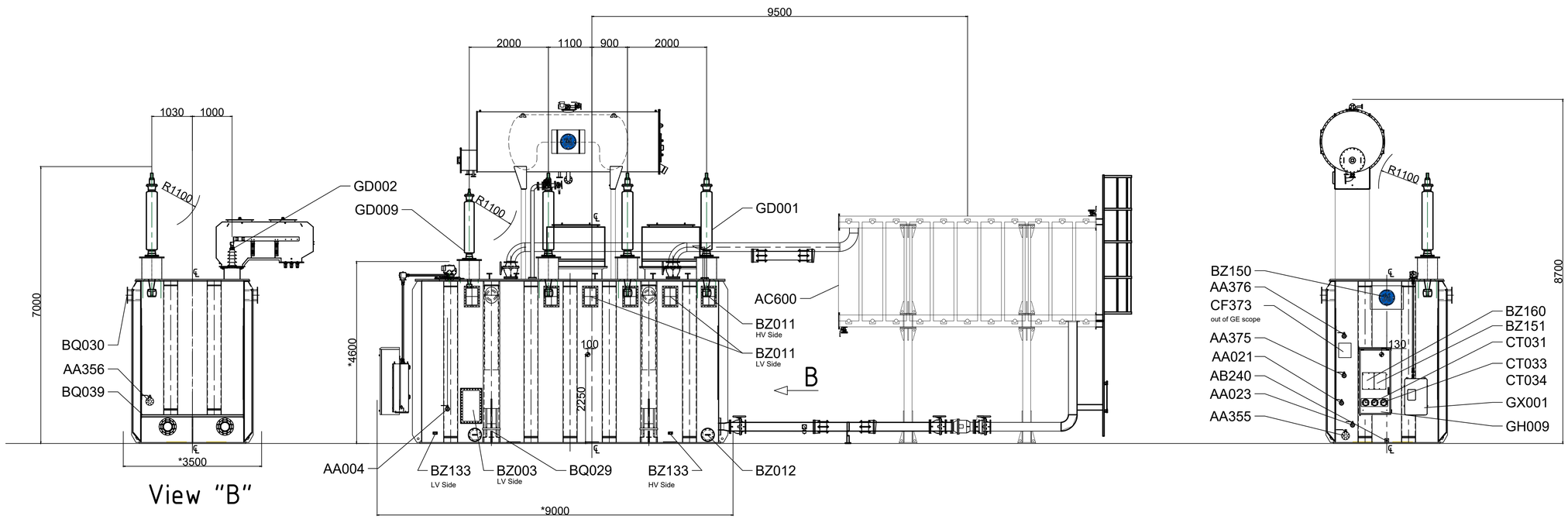

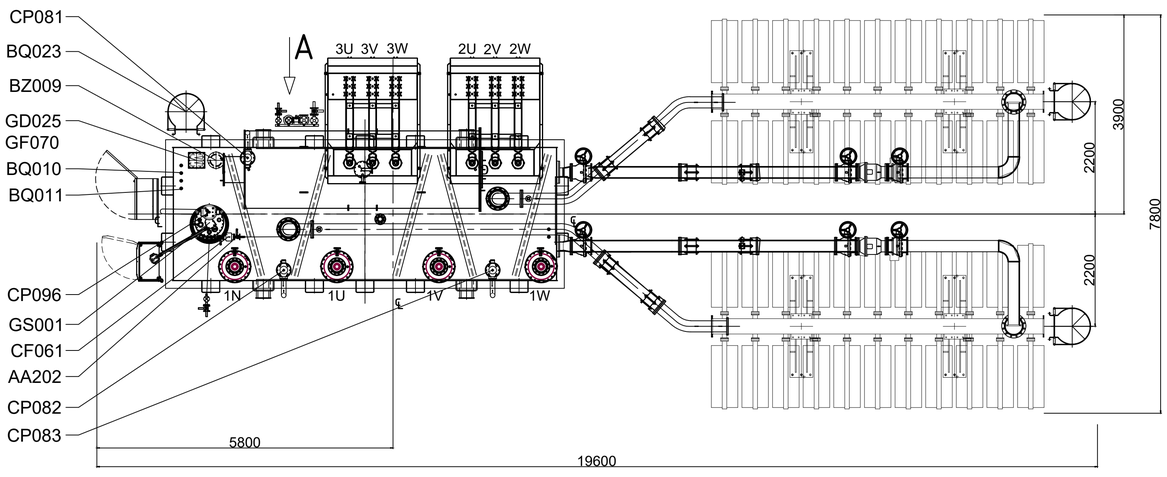

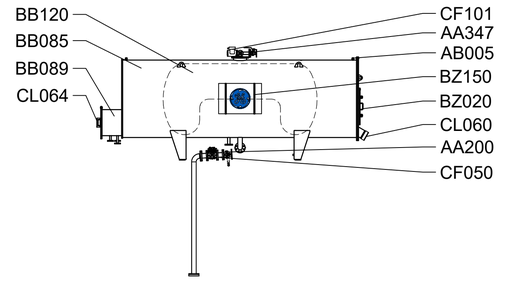

POSITION NO	DESCRIPTION	SIZE	DRAWING NO	QTY	MAKER	COUNTRY
AA004	DRAIN VALVE FOR O.L.T.C.	DN25	3007251	1	DUYAR	TURKEY
AA022	OIL SAMPLING VALVE OF MAINTANK (MIDDLE) - BSP 24 male connector	DN25	3007251	1	DUYAR	TURKEY
AA023	OIL SAMPLING VALVE OF MAINTANK (BOTTOM) - BSP 24 male connector	DN25	3007251	1	DUYAR	TURKEY
AA026	DRAIN VALVE FOR CONSERVATOR (MAINTANK) CUBA	DN40	3007251	1	DUYAR	TURKEY
AA030	DRAIN VALVE FOR CONSERVATOR (O.L.T.C.)	DN40	3007251	1	DUYAR	TURKEY
AA200	VALVE BETWEEN THE MAINTANK AND BUCHHOLZ	DN80	3007251	2	DUYAR	TURKEY
AA201	VALVE BETWEEN THE CONSERVATOR AND BUCHHOLZ	DN80	3007251	1	DUYAR	TURKEY
AA202	VALVE BETWEEN THE O.L.T.C. AND BUCHHOLZ	DN25	3007251	1	DUYAR	TURKEY
AA343	VACUUM VALVE (MAIN TANK)	DN40	3007251	1	DUYAR	TURKEY
AA345	VALVE BETWEEN CONSERVATOR AND MEMBRANE	DN40	3007251	1	DUYAR	TURKEY
AA349	VALVE BETWEEN BREATHER AT001 AND AT005	DN25	3007251	1	DUYAR	TURKEY
AA355	VALVE FOR OIL TREATMENT (OIL-OUTLET) BOTTOM	DN80	3007251	1	DUYAR	TURKEY
AA356	VALVE FOR OIL TREATMENT (OIL-INLET) TOP	DN80	3007251	1	DUYAR	TURKEY
AA375	VALVE FOR FAULT MONITOR - OIL INLET (1/2" NPT)	DN25	3007251	1	DUYAR	TURKEY
AA376	VALVE FOR FAULT MONITOR - OIL OUTLET (1/2" NPT)	DN25	3007251	1	DUYAR	TURKEY
AB005	AIR VENT ON CONSERVATOR OF MAINTANK			2	GE	TURKEY
AB230	BUTTERFLY VALVE FOR RADIATOR	DN80	3089901	16	ENGIN MAKINE	TURKEY
AB240	RESIDUAL OIL DRAIN VALVE FOR MAINTANK M52X2		294062	1	GE	TURKEY
AB600	AIR VENT PLUG ON RADIATOR GR.6	6	293169	8	CEDMOGLU MAK.	TURKEY
AB630	DRAIN PLUG ON RADIATOR GR.12	12	293169	8	CEDMOGLU MAK.	TURKEY
AC600	RADIATOR			18	RAD-TEK	TURKEY
AE001	WHEEL	50T	3097830	4	GE	TURKEY
AN701+ AN707	FAN VAZ C 1800 T.3x3+3Ph/4P/33 Cl C4			6	KONCAR	TURKEY
AT001	DEHYDRATING BREATHER FOR CONSERVATOR (MAINTANK)		DB2000RM-T/OFF	1	MR	GERMANY
AT005	DEHYDRATING BREATHER FOR CONSERVATOR (O.L.T.C.)		DB100RM-T/OFF	1	MR	GERMANY
BB085	CONSERVATOR FOR MAINTANK			1	GE	TURKEY
BB120	AIR-CELL FOR OIL PRESERVATION			1	PRONAL	FRANCE
BQ010	THERMOMETER POCKET		292515	4	AR METAL	TURKEY
BQ011	SPARE THERMOMETER POCKET		292515	1	AR METAL	TURKEY
BQ023	LADDER			1	GE	TURKEY
BQ029	JACKING PAD			4	GE	TURKEY
BQ030	LIFTING LUGS FOR ENTIRE UNIT			4	GE	TURKEY
BQ039	PULLING EYES			4	GE	TURKEY
BQ150	BRACKET FOR CONSERVATOR			1	GE	TURKEY
BZ003	MANHOLE COVER FOR O.L.T.C.			1	GE	TURKEY
BZ009	HANDHOLE FOR CORE EARTHING			1	GE	TURKEY
BZ010	HANDHOLE ON THE COVER			3	GE	TURKEY
BZ011	HANDHOLE ON THE MAINTANK			2	GE	TURKEY
BZ012	MANHOLE TO READY WINDING CLAMPS			4	GE	TURKEY
BZ020	HANDHOLE FOR CLEANING CONSERVATOR OF MAINTANK			1	GE	TURKEY
BZ102	EVACUATING CONNECTION ON CONSERVATOR	DN50		1	GE	TURKEY
BZ115	ARRESTING DEVICE			2	EDER	TURKEY
BZ120	GAS SAMPLING DEVICE FOR BUCHHOLZ RELAY (MAINTANK)			1	EMB	GERMANY
BZ133	TERMINAL FOR MAINTANK EARTHING			4	GE	TURKEY
BZ150	MANUFACTURE'S NAME PLATE			2	GE	TURKEY
BZ151	RATING PLATE			1	GE	TURKEY
BZ160	PRINCIPAL PLAN FOR PIPING AND FITTINGS			1	GE	TURKEY
CF050	BUCHHOLZ RELAY FOR MAINTANK	DN80	616.261/201	1	EMB	GERMANY
CF101	SIGNAL RELAY FOR AIR CELL	DN25	616.030/81	1	EMB	GERMANY
CF373	OIL MONITORING DEVICE: CALISTO 2			1	MORGANSCHAFFE	TURKEY
CF061	PROTECTION RELAY FOR O.L.T.C. RS2001	D25		1	EMB	GERMANY
CL060	OIL LEVEL INDICATOR (MAINTANK)			1	MESSKO	GERMANY
CL064	OIL LEVEL INDICATOR (O.L.T.C.)			1	MESSKO	GERMANY
CL065	OIL LEVEL INDICATOR OF THE MAIN TANK (PRISMATIC TYPE)		70673564	1	MESSKO	GERMANY
CL066	OIL LEVEL INDICATOR OF THE OLTC (PRISMATIC TYPE)			1	MESSKO	GERMANY
CP081	PRESSURE RELIEF DEVICE FOR MAINTANK		XPRD0C100251331 - C5-47866	1	QUALITROL	USA
CP096	PRESSURE RELIEF DEVICE FOR O.L.T.C			1	MESSKO	GERMANY
CT021	RESISTANCE THERMOMETER FOR OIL TEMPERATURE		T006680224	1	GE	TURKEY
CT022	RESISTANCE THERMOMETER FOR OIL TEMPERATURE		T006680224	1	GE	TURKEY
CT031	THERMOMETER FOR OIL TEMPERATURE		MA5045-00407487	1	QUALITROL	US
CT033	THERMOMETER FOR WINDING TEMPERATURE - HV		MA5045-00407488	1	QUALITROL	US
CT034	THERMOMETER FOR WINDING TEMPERATURE - LV		MA5045-00407488	1	QUALITROL	US
CP061	PRESSURE RELAY FOR MAINTANK				QUALITROL	US
GD001	HV BUSHING PMD 145.850.2500			3	PASSONI VILLA	ITALY
GD002	HVN BUSHING PMD 145.850.1250			1	PASSONI VILLA	ITALY
GD009	LV BUSHING DIN 30 NF 3150			6	PASSONI VILLA	ITALY
GD025	CORE-EARTHING TERMINAL			1	GE	TURKEY
GF070	TERMINAL BOX (CORE-EARTHING)			1	GE	TURKEY
GH009	CONTROL CABINET FOR COOLING UNITS AND DEVICES			1		TURKEY
GS001	ON-LOAD TAP CHANGER WL-III-1001-TSE-1427SW			1	MR	GERMANY
GX001	MOTOR DRIVE UNIT TYPE : ETOS SIDE DRIVE ED			1	MR	GERMANY

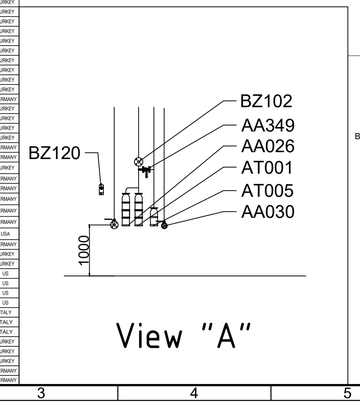

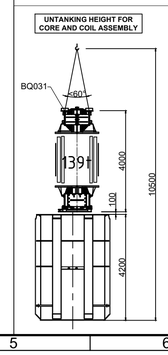

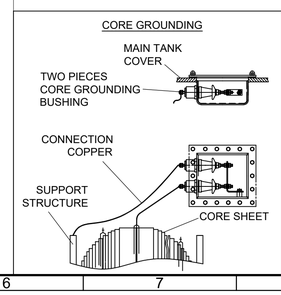

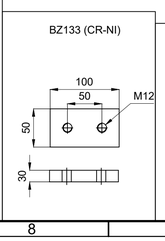

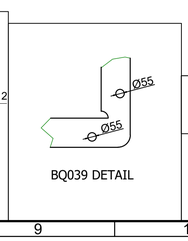

Bushing terminal for HV	Bushing terminal for HV-N
Ø60	Ø40
125	80

Untanking weight	139 000 kg	Shipping weight (without oil)	177 000 kg
Total weight	283 000 kg	Weight of oil	66 000 kg
Rated power	125/125/250 MVA	Vector-group symbol /	YNd1d1
		Frequency	50 Hz
Voltage	132 / 33		kV
Current	1093,5 / 2186,9		A

Rev	Date	Established	Checked	Approved	Description	CDN
00	18/07/2024	KUL	EIP	NAR	Original Issue	---

General tolerances: ISO 2768 -mL for machining -cL for fabrication | Surface texture: ISO 1302 | All dimensions in millimeter unless otherwise stated — IF IN DOUBT - PLEASE ASK

Project number: 5337PA585-01..02

Title: DIMENSIONAL DRAWING

Grid Solutions — Power Transformers

Drawing number: T01105329

Document status: Approved | Scale: 1:1 | Size: A1 | Sheet: 1/1

GRID SOLUTIONS ENERJİ ENDÜSTRİSİ A.Ş. 41410 GEBZE/KOCAELİ/TÜRKİYE

©2021 GE Grid Solutions proprietary and confidential information. All Rights Reserved This document is the property of GE Grid Solutions and may not be reproduced, transmitted, stored or copied in whole or part, or used for certain information stated herein, without the prior written permission of GE Grid Solutions